WARNING:
BEFORE USING THIS FIREARM, READ THROUGH THESE WARNINGS AND INSTRUCTIONS CAREFULLY AND THOROUGHLY.

THIS MANUAL SHOULD ALWAYS ACCOMPANY THIS PISTOL AND BE TRANSFERRED WITH IT UPON CHANGES OF OWNER OR USER.

SAFETY AND INSTRUCTION MANUAL

Para

©2002 Para-Ordnance Mfg., Inc.

THIS MANUAL APPLIES TO PARA-ORDNANCE P-SERIES AND P-SERIES LIMITED PISTOLS.

FIREARMS ARE CLASSIFIED AS DANGEROUS WEAPONS. THEREFORE THIS PRODUCT IS POTENTIALLY LETHAL.

FAILURE TO READ, UNDERSTAND AND FOLLOW ANY OF THESE WARNINGS AND INSTRUCTIONS MAY RESULT IN INJURY, DEATH OR DAMAGE OF PROPERTY.

WARNING

CHILDREN ARE ATTRACTED TO AND CAN OPERATE FIREARMS THAT CAN CAUSE SEVERE INJURIES OR DEATH. PREVENT CHILD ACCESS BY ALWAYS KEEPING GUNS LOCKED AWAY AND UNLOADED WHEN NOT IN USE. IF YOU KEEP A LOADED FIREARM WHERE A CHILD OBTAINS AND IMPROPERLY USES IT, YOU MAY BE FINED OR SENT TO PRISON.

ADVERTENCIA

A LOS NINOS LOS ATRAEN LAS ARMAS DE FUEGO Y LAS PUEDEN HACER FUNCIONAR ELLOS PUEDEN CAUSARSES LESIONES GRAVES Y LA MUERTE. EVITE QUE LOS NINOS TENGAN ACCESO A LAS ARMAS DE FUEGO GUARDANDOLAS SIEMPRE CON LLAVE Y DESCARGADAS CUANDO NO LAS ESTE UTILIZANDO, SI USTED TIENE UNA ARMA DE FUEGO CARGADA EN UN LUGAR EN QUE UN NINO TIENE ACCESO A ELLA Y LA USA INDEBIDAMENTE, LE PUEDEN DAR UNA MULTA O ENVIARLO A LA CARCEL.

WARNING: DO NOT MAKE ANY ATTEMPTS TO PRACTICE LOADING, UNLOADING, ETC. WITH LIVE AMMUNITION UNLESS YOU HAVE FULLY UNDERSTOOD THIS MANUAL AND ARE CERTAIN ABOUT THE PROPER HANDLING AND OPERATION OF THIS PRODUCT.

WHERE IN DOUBT ABOUT YOUR ABILITY TO HANDLE OR USE THIS HANDGUN SAFELY, SEEK SUPERVISED INSTRUCTION RUN BY A LOCAL GUN CLUB, GUN DEALER, OR POLICE DEPARTMENT.

**FIREARMS SAFETY –
ACCIDENT PREVENTION**

YOUR RESPONSIBILITY

**WHEN PRESSING THE TRIGGER,
YOU MUST EXPECT THE GUN TO FIRE
AND YOU MUST TAKE FULL
RESPONSIBILITY FOR FIRING IT**

**ALWAYS TREAT A FIREARM
AS IF IT WERE LOADED**

THE BASIC PRINCIPLES OF HANDLING AND OPERATION OF THIS FIREARM MUST BE FULLY UNDERSTOOD AND FOLLOWED EXACTLY. THIS MANUAL IS PROVIDED TO ASSIST YOU IN THE PROPER USE AND MAINTENANCE OF YOUR PARA-ORDNANCE PISTOL. IF YOU HAVE ANY FURTHER QUESTIONS PLEASE CONTACT US DIRECTLY.

MANUALS ARE AVAILABLE
FREE FROM THE FACTORY:

Para

980 TAPSCOTT ROAD
SCARBOROUGH, ONTARIO M1X 1C3
(416) 297-7855 • FAX: (416) 297-1289
www.paraord.com

CONTENTS

Page

MAIN FEATURES.....1

FIREARM SAFETY INSTRUCTIONS.....3

FEATURES
- TECHNICAL DATA & AMMO INFO.....8

SAFETY FEATURES
- SLIDE LOCK SAFETY.....9
- GRIP SAFETY.....11
- PASSIVE SAFETIES.....12

FUNCTION
- MALFUNCTIONS.....13
- LOADING.....14
- UNLOADING.....19
- FIRING.....20

MAINTENANCE
- DISASSEMBLY.....22
- REASSEMBLY.....26
- CLEANING PISTOL.....35
- CLEANING HIGH-CAPACITY MAGAZINE.....36
- DISASSEMBLY, CLEANING AND REASSEMBLY OF 10-ROUND PARA-ORDNANCE MAGAZINE....38
- TRANSPORTATION & STORAGE.....41

WARRANTY INFORMATION.....42

SPARE PARTS.....43

PARTS ILLUSTRATION.....44

PARTS LIST.....45

SERVICE & REPAIR.....46

LIMITS & LIABILITY.....47

MAIN FEATURES - P-Series Performance Plus

MAIN FEATURES - P-Series Limited

FIREARMS SAFETY INSTRUCTIONS

DO NOT USE ANY FIREARM WITHOUT HAVING A FULL AND COMPLETE UNDERSTANDING OF ITS PARTICULAR MECHANICAL AND HANDLING CHARACTERISTICS.

FOR YOUR SAFETY AND THE SAFETY OF OTHERS YOU MUST ENSURE YOUR COMPLETE AND CLEAR UNDERSTANDING OF THIS MANUAL AND YOU MUST FOLLOW ITS SAFETY INSTRUCTIONS EXACTLY.

NEVER ALLOW ANYONE TO USE THIS FIREARM WITHOUT HAVING THAT PERSON READ THIS MANUAL FIRST.

IMPROPER HANDLING OF YOUR PISTOL CAN RESULT IN INJURY, DEATH OR PROPERTY DAMAGE.

CAUTIONS:

1. ALWAYS TREAT EVERY FIREARM AS IF IT WERE LOADED.
2. NEVER – EVER – POINT ANY GUN, LOADED OR UNLOADED, AT ANYTHING YOU DO NOT INTEND TO SHOOT.
3. ALWAYS KEEP YOUR FINGER AWAY FROM THE TRIGGER, OUTSIDE THE TRIGGER GUARD, UNTIL YOU ARE AIMING AT A TARGET AND READY TO SHOOT.

4. ALWAYS BE SURE OF YOUR BACKSTOP, WHAT LIES BEYOND YOUR TARGET, AND THE SAFETY OF BYSTANDERS BEFORE YOU CONSIDER SHOOTING YOUR PISTOL. THE BACKSTOP MUST BE ADEQUATE TO STOP AND CONTAIN BULLETS. OTHERWISE, A BULLET IS CAPABLE OF TRAVELING THROUGH OR PAST YOUR TARGET FOR A DISTANCE OF UP TO 1 1/2 MILES. DO NOT SHOOT IF YOU ARE UNCERTAIN ABOUT WHAT LIES BEYOND YOUR TARGET.

5. ALWAYS MAKE SURE YOUR PISTOL IS UNLOADED AND THE SLIDE IS LATCHED OPEN BEFORE HANDING IT TO ANOTHER PERSON OR LAYING IT DOWN.

6. ALWAYS MAKE SURE THAT YOUR PISTOL HAS NOT BEEN IN ANY WAY DAMAGED AS THE RESULT OF IT HAVING BEEN DROPPED OR ANY OTHER INCIDENT OR CIRCUMSTANCE, INCLUDING CORROSION, THAT MAY HAVE POSSIBLY CAUSED DAMAGE TO SOME PARTS OF THE MECHANISM.

7. ALWAYS HAVE A COMPETENT GUNSMITH INSPECT YOUR PISTOL SO AS TO ENSURE ITS PROPER FUNCTION. REMEMBER, ONLY WEAPONS IN PERFECT WORKING ORDER CAN BE SAFE WEAPONS.

8. NEVER LEAVE A PISTOL COCKED AND READY TO FIRE.

ALWAYS USE YOUR HANDGUN SAFELY AND WISELY. PROTECT YOURSELF AND THOSE AROUND YOU BY TAKING THE PROPER AND NECESSARY PRECAUTIONS PRIOR TO FIRING YOUR PISTOL. REMEMBER, UNSAFE PRACTICES CAN BE THE CAUSE OF INJURY, DEATH, OR PROPERTY DAMAGE.

9. NEVER LEAVE A LOADED PISTOL UNATTENDED.

10. ALWAYS MAKE SURE THAT ANY OTHER SHOOTERS OR BYSTANDERS ARE WELL CLEAR OF YOU WHEN PREPARING TO SHOOT YOUR PISTOL. EJECTED CARTRIDGES CAN CAUSE INJURY TO ANYONE STANDING IN THEIR PATH. NEVER OBSTRUCT THE EJECTION PORT ON YOUR PISTOL BY PLACING YOUR FINGERS IN FRONT OF IT.

11. ALWAYS WEAR ADEQUATE SHOOTING GLASSES AND ENCOURAGE OTHERS TO DO THE SAME. UNPROTECTED EYES MAY BE INJURED BY POWDER GAS, CARBON RESIDUE, LUBRICANT, METALLIC PARTICLES OR SIMILAR DEBRIS THAT CAN DAMAGE EYES AND EVEN CAUSE BLINDNESS.

12. ALWAYS WEAR ADEQUATE EAR PROTECTION AND MAKE SURE THAT OTHERS IN YOUR VICINITY DO THE SAME. REPEATED EXPOSURE TO SHOOTING NOISE CAN LEAD TO CUMULATIVE, PERMANENT HEARING LOSS.

13. ALWAYS CARRY YOUR PISTOL EMPTY WITH THE SLIDE LATCHED OPEN UNTIL PREPARING TO FIRE.

ALWAYS EMPLOY SAFE HANDLING, LOADING, AND SHOOTING METHODS. REMEMBER A LOADED FIREARM HAS THE POTENTIAL TO KILL. INTELLIGENTLY HANDLED IT CAN BE USED SAFELY.

14. NEVER CONSUME ALCOHOL OR TAKE DRUGS PRIOR TO SHOOTING. IF UNDER MEDICATION, SEEK A DOCTOR'S ADVICE TO BE SURE THAT YOU ARE FIT AND ABLE TO HANDLE A GUN SAFELY.

15. NEVER SHOOT AT A FLAT SURFACE OF WATER OR AT ANY HARD SURFACE IN ORDER TO AVOID HAZARDOUS RICOCHETS THAT CAN CAUSE INJURY, DEATH, OR PROPERTY DAMAGE.

ALWAYS USE AMMUNITION THAT COMPLIES WITH THE INDUSTRY PERFORMANCE STANDARD AS ESTABLISHED BY THE SPORTING ARMS AND AMMUNITION MANUFACTURER'S INSTITUTE (SAAMI). TO DO OTHERWISE MAY RESULT IN INJURY, DEATH, OR DAMAGE TO PROPERTY.

16. ALWAYS MAKE SURE THE MUZZLE IS POINTED IN A SAFE DIRECTION.

17. NEVER LOAD YOUR PISTOL UNTIL YOU ARE PROPERLY READY TO USE IT. UNLOAD IT THE MINUTE YOU HAVE COMPLETED SHOOTING.

18. ALWAYS EXAMINE THE BARREL BORE TO BE CERTAIN IT IS CLEAR AND FREE OF ANY OBSTRUCTIONS. ANY OBSTRUCTION, WHETHER IT BE FROM DIRT, CORROSION OR OTHER DEBRIS, EVEN A HEAVY COATING OF OIL OR DROPS OF WATER, MAY RESULT IN DAMAGE TO THE PISTOL THAT CAN CAUSE INJURY, DEATH, OR PROPERTY DAMAGE.

19. ALWAYS USE ONLY CLEAN, DRY, ORIGINAL HIGH QUALITY FACTORY-MADE AMMUNITION THAT IS IN GOOD CONDITION AND OF THE PROPER TYPE AND CALIBER FOR YOUR GUN. IMPROPERLY LOADED AMMUNITION CAN PROVE TO BE EXTREMELY DANGEROUS WHEN CARTRIDGES HAVE BEEN LOADED OUTSIDE THE EXACTING SAFETY LIMITS BUILT INTO YOUR PISTOL.

20. ALWAYS HAVE THE SAFETY ON UNTIL YOU INTEND TO FIRE.

21. NEVER WALK OR CLIMB WITH A LOADED FIREARM. PISTOLS HAVE SHORT BARRELS AND THEREFORE EXTREME CARE SHOULD BE TAKEN WHEN HANDLING THEM BECAUSE THEIR ATTITUDE AND DIRECTION CAN BE EASILY CHANGED. HOLD YOUR PISTOL SO THAT THE MUZZLE IS CONTROLLABLE.

ALWAYS STORE GUNS AND AMMUNITION SEPARATELY, LOCKED IF POSSIBLE, OUT OF SIGHT, AND BEYOND THE REACH OF CHILDREN AND INEXPERIENCED OR CARELESS ADULTS.

22. ALWAYS MAKE SURE THAT YOUR PISTOL IS NOT LOADED BEFORE CLEANING AND STORING IT.

23. NEVER DRY FIRE YOUR PISTOL WHEN YOU HAVE REMOVED THE SLIDE FROM THE RECEIVER.

LEAD WARNING:

DISCHARGING FIREARMS IN POORLY VENTILATED AREAS, CLEANING FIREARMS, OR HANDLING AMMUNITION MAY RESULT IN EXPOSURE TO LEAD AND OTHER SUBSTANCES KNOWN TO CAUSE BIRTH DEFECTS, REPRODUCTIVE HARM, AND OTHER SERIOUS INJURY. HAVE ADEQUATE VENTILATION AT ALL TIMES. WASH HANDS THOROUGHLY AFTER EXPOSURE.

FEATURES

With law enforcement officers and competitive shooters in mind, Para-Ordnance's P-Series pistols offer unique features along with the durability and reliability of a time-proven design.

The P-Series semi-automatic pistols are quite similar in appearance while they all function in the same manner. Among themselves, the pistols vary in caliber, size, weight, barrel/barrel bushing configuration, surface finish, and in the type of metal used for their respective receivers (steel or stainless steel).

While this manual uses the P13•45 and P14•45 Limited for its illustrations, the directions also apply to the P12•45, P16•40, P18•9 both in the Performance Plus and Limited models, unless otherwise noted.

Table 1:
TECHNICAL DATA AND AMMUNITION INFORMATION

MODEL	P14•45/ P16•40/P18•9 Δ	P13•45	P12•45
BARREL LENGTH	5"	4-1/4"	3-1/2"
RECEIVER MATERIAL	Steel or Stainless Steel	Steel or Stainless Steel	Steel or Stainless Steel
FINISHES	Matte Black or Stainless	Matte Black or Stainless	Matte Black or Stainless
MAGAZINE CAPACITY*	14/16/18	13	12
CALIBER	.45 ACP/ .40 S&W/9mm	.45 ACP	.45 ACP

Δ P18•9 is available in Stainless Finish only.

* For recreational use, magazine capacity is restricted to 10 rounds in U.S.A. and Canada.

SAFETY FEATURES

Para-Ordnance P-Series semi-automatic pistols are equipped with a number of safety devices (some are hand-operated while others are passive) that are designed to minimize accidental discharges.

**NEVER RELY ON A SAFETY MECHANISM TO JUSTIFY CARELESS HANDLING OR POOR MAINTENANCE.
ALWAYS POINT YOUR PISTOL IN A SAFE DIRECTION.**

HAND-OPERATED SAFETIES

These safeties are activated manually.

SLIDE LOCK SAFETY

This safety device can only be activated when the hammer is fully cocked with slide fully forward (***Figure 1***).

Figure 1

**NEVER LEAVE YOUR PISTOL COCKED AND READY TO FIRE.
THIS IS AN EXTREMELY DANGEROUS CONDITION WHICH CAN LEAD TO AN ACCIDENTAL DISCHARGE THAT MAY CAUSE INJURY, DEATH, OR PROPERTY DAMAGE.**

To engage the Slide Lock Safety you must, while pointing the pistol in a safe direction with your finger away from the trigger, pull the slide to its most rearward position and then let it return all the way forward, freely and with all its force. This will leave the hammer fully cocked. Then push the Slide Lock Safety up until it fully engages the Slide Lock Notch (***Figure 2***). At this point, the slide is prevented from moving rearward and an internal cam surface engages the sear to prevent the hammer from moving forward if the trigger is pressed.

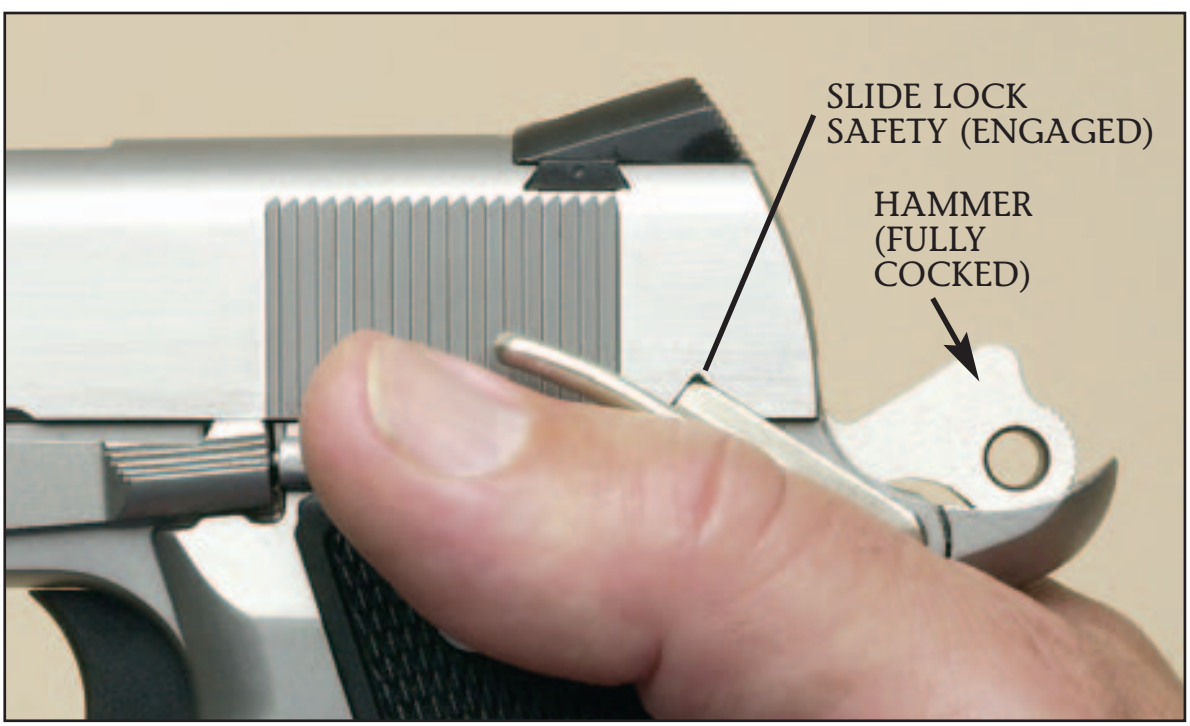

Figure 2

Grip Safety

The Grip Safety (***Figure 3***) prevents the rearward travel of the trigger, which is necessary to fire the pistol, unless the pistol is firmly in hand with a positive grasp of the Grip Safety. When ready to fire the pistol with a firm hold on the receiver, the forward pressure that is applied to the Grip Safety disengages this safety device and allows the trigger the necessary freedom for rearward movement required to fire the pistol.

NEVER COMPROMISE SAFETY. NEVER ALTER OR MODIFY THIS PISTOL IN ANY WAY. THE MANUFACTURER WILL NOT BE RESPONSIBLE FOR ANY UNAUTHORIZED MODIFICATIONS PERFORMED IN THIS GUN.

Figure 3

Passive Safeties

THESE SAFETIES ARE ACTIVATED AUTOMATICALLY WITHOUT MANUAL INTERVENTION. DO NOT BYPASS THEM OR RENDER THEM INOPERATIVE.

These mechanisms form parts of a safety system incorporated into your Para-Ordnance pistol and they are designed and installed for the prevention of accidental discharges that could otherwise follow as the result of some commonplace occurrences.

NEVER RELY ON A SAFETY MECHANISM TO JUSTIFY CARELESS HANDLING OF YOUR PISTOL.

Your Para-Ordnance pistol is equipped with the following passive safeties:

Disconnector: Protects against firing a round prior to its being properly seated in the chamber of the barrel and the slide and barrel not having locked together.

Inertia Firing Pin: Size and position of the firing pin, which is held to the rear by a spring, keep the pin from striking the cartridge primer unless the spring force and inertia of the firing pin are overcome by the blow of the hammer.

Hammer Safety Stop: The hammer is designed with a flat, shelf-like surface which is there to prevent the hammer from falling forward and onto the firing pin unintentionally by engaging the sear should there occur a primary sear notch failure.

Firing Pin Lock: To minimize the risk of accidental discharge that may be the result of the pistol being dropped or the muzzle receiving a blow, this safety device prevents the movement of the firing pin until the trigger is intentionally pressed.

ALWAYS EXPECT THE GUN TO FIRE WHEN YOU PRESS THE TRIGGER.

FUNCTION

The action of the P-Series pistols is based on a tilting barrel design that locks the barrel and slide together at the moment of firing. After firing, the barrel and slide recoil to the rear for a short distance still locked together. Following this initial movement, the barrel tilts downward from its locked position, permitting full recoil of the slide and the extraction and ejection of the spent cartridge cases.

ALWAYS REMEMBER, THAT WHEN FIRED, A SEMI-AUTOMATIC PISTOL RELOADS AND RECOCKS ITSELF AUTOMATICALLY AND IS READY TO FIRE AGAIN BY SIMPLY PRESSING THE TRIGGER. ALWAYS KEEP THE PISTOL POINTED IN A SAFE DIRECTION.

MALFUNCTIONS

1. In any semi-automatic pistol, an unfired cartridge or fired cartridge case may become jammed between the slide and barrel.

NEVER FORCE A JAMMED ACTION. TO DO SO MAY CAUSE AN EXPLOSION THAT CAN RESULT IN SERIOUS INJURY, DEATH OR PROPERTY DAMAGE.

To clear a jammed cartridge, KEEP THE MUZZLE POINTED IN A SAFE DIRECTION and remove the magazine. Pull the slide back and lock it to the rear by engaging the Slide Stop. Remove the cartridge.

2. STOP SHOOTING IMMEDIATELY if you encounter any other mechanical malfunction while firing your pistol, e.g., cartridge has failed to extract, report on firing does not sound right, powder gas is being "spit out," cartridge primer is punctured or cartridge case is bulged or punctured. HAVE THE FIREARM AND AMMUNITION EXAMINED BY A COMPETENT GUNSMITH.

3. FAILURE TO FIRE: KEEP THE MUZZLE POINTED IN A SAFE DIRECTION and hold it there for 30 seconds to determine if a HANGFIRE (slow ignition) has occurred. If round has not fired within the 30 seconds, remove the magazine, eject the round and examine the primer.

   NOTE: Disposal of misfired or otherwise damaged, unfired cartridges should be carried out according to instructions provided by the manufacturer of the ammunition.

Loading

PRACTICE THESE IMPORTANT ASPECTS OF SAFE GUN HANDLING WITH AN UNLOADED PISTOL OR WITH DUMMY ROUNDS UNTIL YOU ARE ABLE TO PERFORM EACH OF THE FOLLOWING STEPS WITH SKILL AND CONFIDENCE. READ THROUGH THIS MANUAL COMPLETELY BEFORE MAKING ACTUAL USE OF THIS PISTOL.

1. Remove the empty magazine from your pistol by pressing on the Magazine Catch button (***Figure 4***).
   NOTE: As the magazine will fall free from the receiver of its own weight, place one hand under the magazine to prevent it from dropping to the ground and having it damaged.

Figure 4

DO NOT LOAD DAMAGED AMMUNITION. ALWAYS LOAD YOUR MAGAZINE WITH CLEAN, DRY, ORIGINAL HIGH QUALITY FACTORY MADE AMMUNITION THAT IS IN GOOD CONDITION AND THE PROPER CALIBER FOR YOUR PISTOL (TABLE 1). PRACTICE WITH DUMMY CARTRIDGES.

2. Load magazine from the top open end, the front of the cartridge pointing away from you, with the type and quantity of ammunition for your pistol (***Table 1***). Press rounds down and back (***Figure 5***).

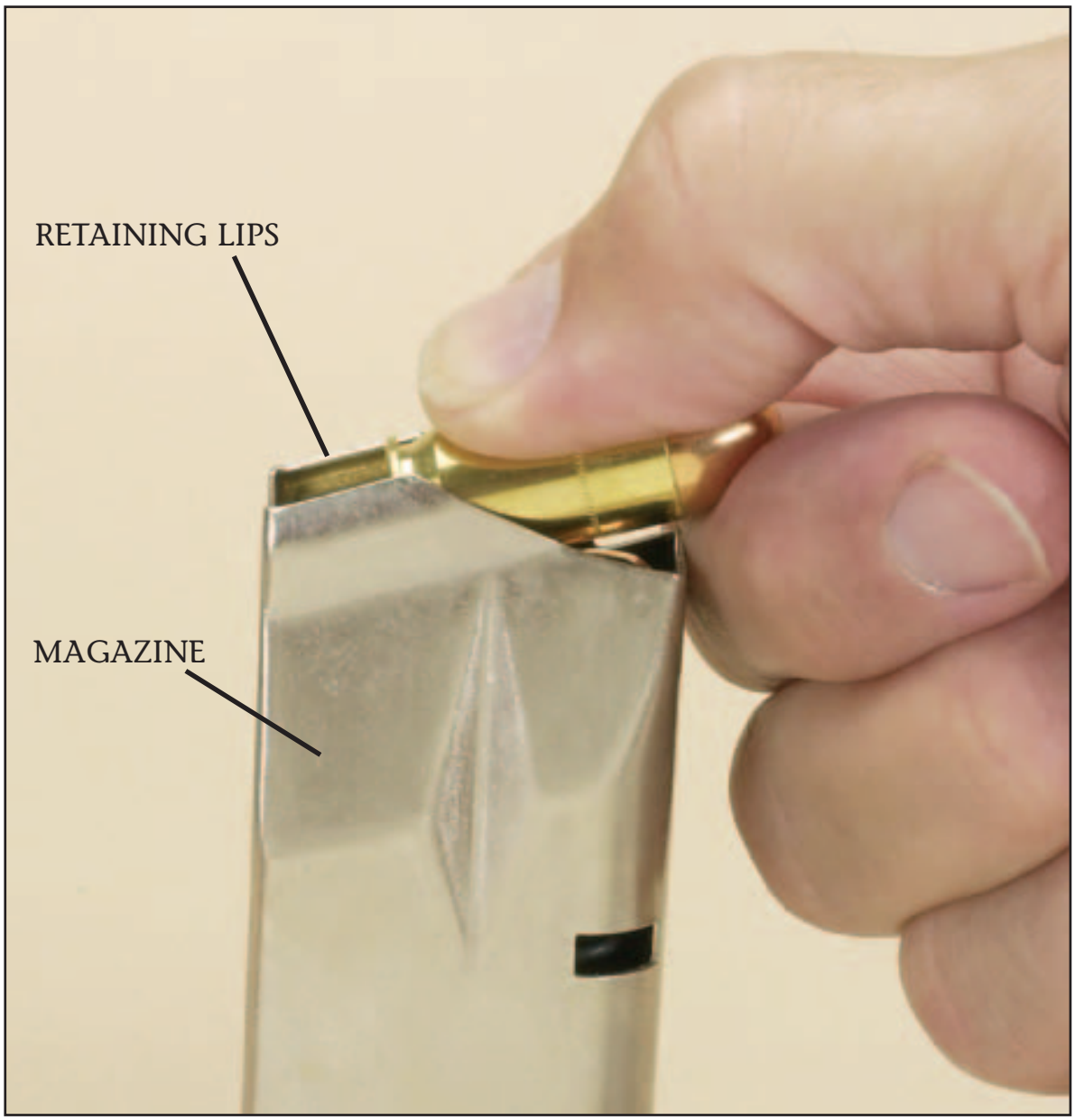

Figure 5

3. ENSURE THAT THE BARREL CHAMBER IS EMPTY AND THAT THE BORE IS FREE OF OBSTRUCTIONS. To do so, pull back on the slide, by grasping the serrated sides of the slide from the rear, and take a look into the chamber and bore. Having inspected the chamber and bore, and made sure the chamber is empty, allow the slide to return to its forward position. Where this step has caused the hammer to cock, press the trigger causing the hammer to fall with an empty chamber.

4. Insert the magazine into the frame of the pistol with cartridges pointing forward and make sure that the magazine is pressed up far enough to lock into place. **NOTE:** DO NOT SLAM THE MAGAZINE INTO PLACE.

5. WITH THE MUZZLE ALWAYS POINTED IN A SAFE DIRECTION, hold the pistol firmly in the shooting hand WITHOUT TOUCHING THE TRIGGER. With the thumb and forefinger of the other hand on the serrated finger grips of the slide, pull the slide back, as far as it will go, to cock the hammer. Release the slide and allow it to fly forward with all its force and feed the top round from the magazine into the chamber. THE PISTOL IS NOW READY FOR INSTANT USE.

6. APPLY SLIDE LOCK SAFETY UNTIL YOU ARE READY TO SHOOT.

NEVER LEAVE YOUR PISTOL IN THE COCKED AND READY TO FIRE POSITION. THIS CONDITION IS EXTREMELY DANGEROUS.

LOADING - ALTERNATE SEQUENCE

PRACTICE THESE IMPORTANT ASPECTS OF SAFE GUN HANDLING WITH AN UNLOADED PISTOL OR WITH DUMMY ROUNDS UNTIL YOU ARE ABLE TO PERFORM EACH OF THE FOLLOWING STEPS WITH SKILL AND CONFIDENCE. READ THROUGH THIS MANUAL COMPLETELY BEFORE MAKING ACTUAL USE OF THIS PISTOL.

1. Insert an **EMPTY** magazine (one with no cartridges in it) into the frame of the pistol. Pull back on the slide, by grasping the serrated sides of the slide from the rear, until the Magazine Follower pushes the Slide Stop up into the Slide Stop Notch on the slide (Figure 4). The slide is now locked open in its rearward position and the hammer is cocked.

2. Remove the empty magazine from your pistol by pressing on the Magazine Catch button (Figure 4). NOTE: As the magazine will fall free from the receiver of its own weight, place one hand under the magazine to prevent it from dropping to the ground and having it damaged.

3. ENSURE THAT THE BARREL CHAMBER IS EMPTY AND THAT THE BORE IS FREE OF OBSTRUCTIONS. VISUALLY AND PHYSICALLY INSPECT THE BARREL CHAMBER TO ENSURE THAT IT IS EMPTY. Insert a loaded magazine into the frame of the pistol with cartridges pointing forward and make sure that the magazine is pressed up far enough to lock into place. NOTE: DO NOT SLAM THE MAGAZINE INTO PLACE OR OVER INSERT IT.

4. WITH THE MUZZLE ALWAYS POINTED IN A SAFE DIRECTION, hold the pistol firmly in the shooting hand WITHOUT TOUCHING THE TRIGGER. Pull back on the slide with the other hand, by grasping the serrated sides of the slide

from the rear, as far as it will go. Release the slide and allow it to fly forward with all its force and feed the top round from the magazine into the chamber. THE PISTOL IS NOW READY FOR INSTANT USE.

5. APPLY SLIDE LOCK SAFETY UNTIL YOU ARE READY TO SHOOT.

NEVER LEAVE YOUR PISTOL IN THE COCKED AND READY TO FIRE POSITION. THIS CONDITION IS EXTREMELY DANGEROUS.

UNLOADING

Always unload your pistol immediately after use and before cleaning and storage. **BEFORE PROCEEDING MAKE SURE YOU ARE WEARING SAFETY GLASSES AND KEEP THE PISTOL POINTED AWAY FROM YOUR FACE.**

FOLLOW THIS UNLOADING SEQUENCE EXACTLY IN ORDER TO AVOID THE POSSIBILITY OF THE CHAMBER BEING UNINTENTIONALLY LOADED WITH A LIVE CARTRIDGE.

1. WITH THE MUZZLE ALWAYS POINTED IN A SAFE DIRECTION, hold the pistol firmly in the shooting hand WITHOUT TOUCHING THE TRIGGER. Remove the magazine by placing the other hand below it and pressing the magazine catch button.

2. When unloading prior to the magazine having been totally expended and the slide stop having latched the slide open, keep your hands clear of the ejection port and pull the slide back vigorously to extract and eject a round from the chamber. **NOTE:** If the slide is locked open in its rearward position, this step (Step #2) does not apply.

3. **CAUTION:** INSPECT THE CHAMBER AND MAKE SURE THAT IT IS EMPTY.

4. With pistol still pointing in a safe direction, release the slide and allow it to snap forward on the empty chamber and then press the trigger and let the hammer fall forward. **NOTE:** If the slide is locked open to its rearward position, pull the slide back slightly and then release it.

5. If the magazine contains any cartridges, hold it with the bullet end of the cartridges pointing away from you and press each cartridge forward and out of the magazine.

6. SEGREGATE MISFIRED AND DAMAGED AMMUNITION FOR DISPOSAL ACCORDING TO AMMUNITION MANUFACTURER'S INSTRUCTIONS.

FIRING

ALWAYS WEAR AND ENCOURAGE OTHERS AROUND YOU TO WEAR EAR PROTECTION AND SAFETY GLASSES WHICH SHOULD PREVENT POSSIBLE PERMANENT HEARING LOSS OR BLINDNESS.

1. WITH THE BARREL ALWAYS POINTING IN A SAFE DIRECTION, load your pistol as previously described in the section on "LOADING."

2. With a firm hold on the pistol receiver, KEEPING YOUR FINGER AWAY FROM THE TRIGGER, take aim and press down on the Slide Lock Safety to disengage it from the slide lock notch.

3. Take steady aim at your target and place your index finger over the trigger. Press the trigger gently, pulling it to the back, until the hammer falls on the firing pin.

THIS IS A SEMI-AUTOMATIC PISTOL THAT WHEN FIRED, AUTOMATICALLY RELOADS AND RECOCKS ITSELF AND IS READY TO FIRE AGAIN SIMPLY BY PULLING THE TRIGGER.

4. Immediately following the firing of a shot, and if a subsequent shot is not to be fired at once, apply the Slide Lock Safety by pushing it into the slide lock notch. However, if the last round has already been fired from the magazine the slide will be locked to the rear with the engagement of the Slide Stop and the Slide Lock Safety cannot be applied.

5. WITH PISTOL POINTING IN A SAFE DIRECTION, unload as previously described in section on "UNLOADING."

MAINTENANCE

Proper periodic maintenance is essential to the reliable functioning of any firearm. The service life and performance of the pistol depend upon correct handling and proper care. All firearms require periodic maintenance and inspection which may reveal a need for adjustment or repair.

You should clean your pistol as soon after firing as possible and where your pistol has not been fired it should still be cleaned periodically. Have your firearm checked by a competent gunsmith annually, even if no functioning problem exists, since some potential problems may not be apparent from external examination of the pistol.

If the pistol gets wet, or is exposed to sand or other foreign matter, have it cleaned as soon as possible.

DISASSEMBLY

ALWAYS WEAR SAFETY GLASSES AND KEEP PISTOL POINTED AWAY FROM YOUR FACE, WHEN PREPARING TO STRIP AND CLEAN YOUR PISTOL TO AVOID INJURY TO THE EYES IN THE EVENT THAT SOME COMPONENT MAY COME FLYING LOOSE FROM YOUR GUN.

Due to some differences between the P12•45/ P12•45 Limited as compared to the P14•45/ P14•45 Limited, P13•45/ P13•45 Limited, P16•40 Limited and the P18•9, it is necessary, for the purposes of these disassembly instructions, that these pistols be identified separately in the procedure.

Follow the steps for disassembly that apply to your specific pistol, carefully.

STEP 1. (**P14•45, P13•45, P18•9 and P14•45 Limited, P13•45 Limited, P16•40 Limited Only. Go to Page 31 for P12•45/P12•45 Limited.**) Always make certain that the MAGAZINE HAS BEEN REMOVED and your PISTOL IS NOT LOADED.

STEP 2. With barrel pointing upward and away from your face, place the pistol with the back (heel) of the receiver and the grip safety resting on a table or bench.

BEFORE PROCEEDING MAKE SURE YOU ARE WEARING SAFETY GLASSES AND KEEP THE MUZZLE OF THE PISTOL POINTED AWAY FROM YOUR FACE.

STEP 3.

Using the barrel bushing wrench provided press down the recoil spring plug (located below the muzzle) while at the same time, rotating the barrel bushing clockwise for about a quarter (1/4) turn so as to free the plug and recoil spring (***Figure 6***).

Continue to apply pressure on the recoil spring plug to prevent ejection of it and the spring. Then gently and gradually allow the spring and the recoil spring plug to extend out of the slide (***Figure 7***).

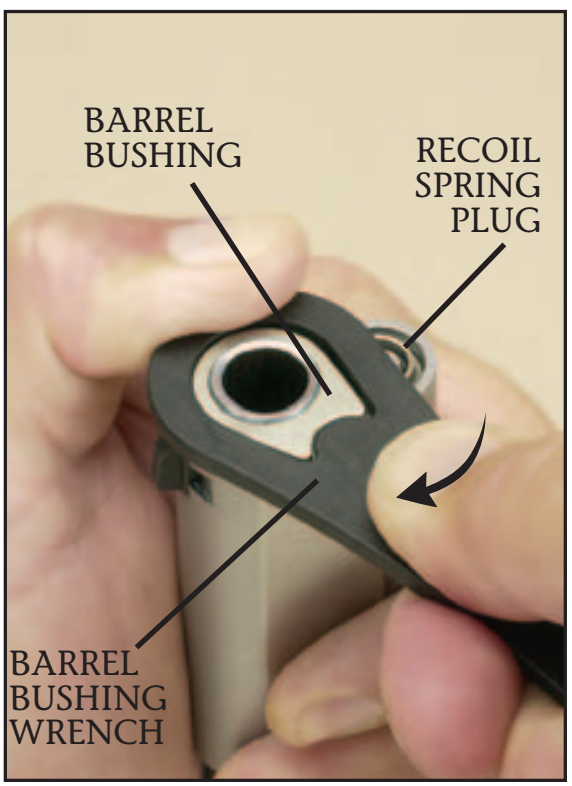

Figure 6

Figure 7

STEP 4. Pull back on hammer spur to cock the hammer.

STEP 5. Push the slide back to the point that the slide stop lug is directly opposite the disassembly notch (***Figure 8***). Then push the rounded end of the slide stop pin, on the right side of the receiver, inward and through the receiver and out the left side.

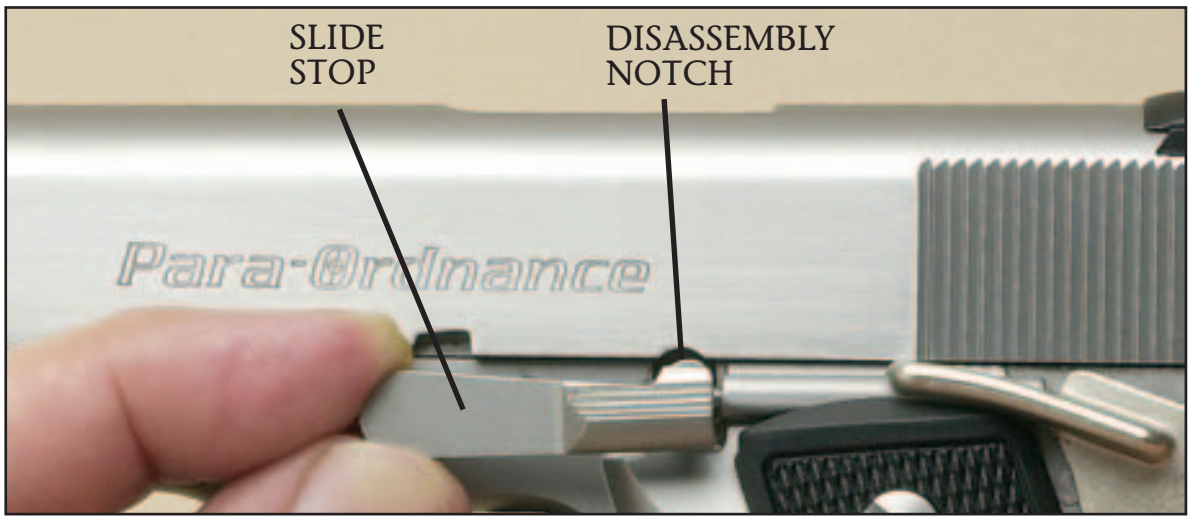

Figure 8

Disengage slide stop from the slide by removing slide stop completely from the receiver (***Figure 9***).

Figure 9

STEP 6. Push slide forward and remove the slide from the receiver.

NEVER DRY FIRE YOUR PISTOL WITH THE SLIDE REMOVED FROM THE RECEIVER.

STEP 7. Pull recoil spring straight forward and remove it from the recoil spring guide (***Figure 10***) (remember, when you reassemble the spring back on the guide, that the open end of the spring should point forward). Lift the rear of the recoil spring guide toward the rear and out of the slide.

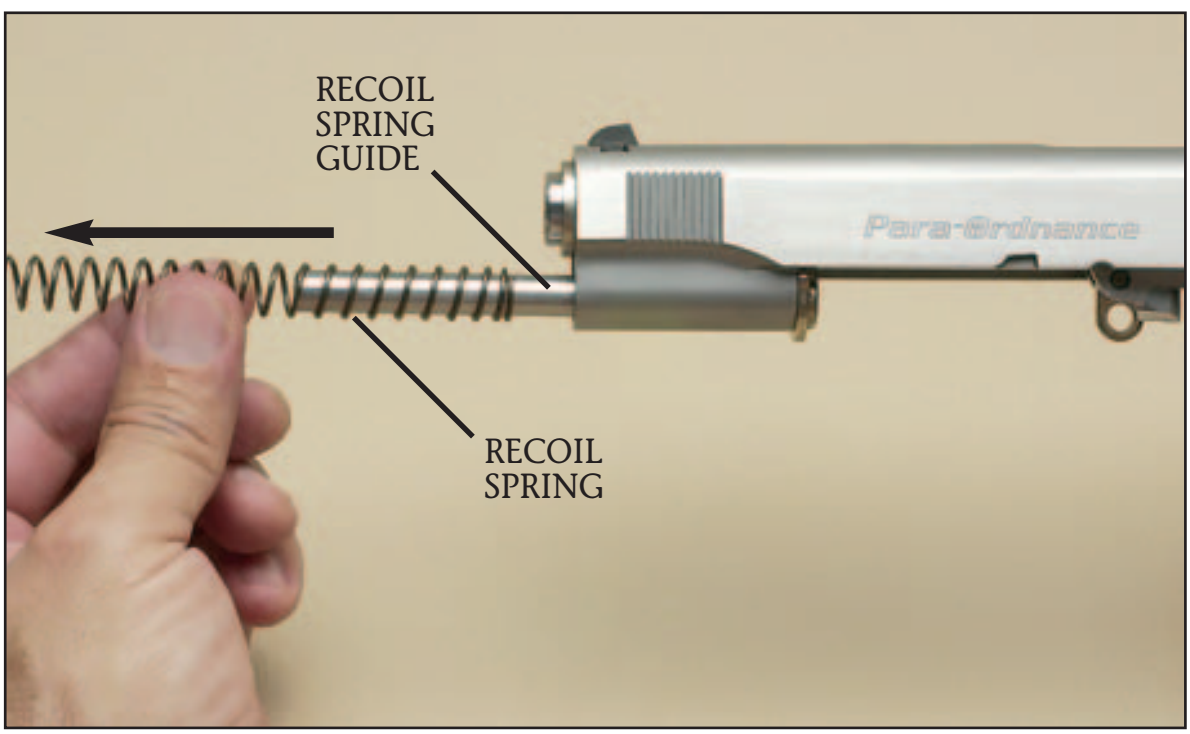

Figure 10

STEP 8. To remove the barrel bushing from the barrel, turn the bushing counter-clockwise and then push the barrel and bushing forward to the point that the bushing is clear of the slide and can be removed from the barrel (***Figure 11***).

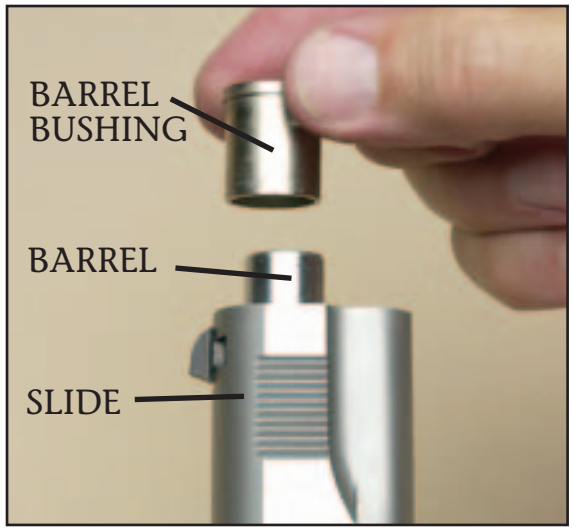

Figure 11

STEP 9. With barrel bushing already removed, push barrel link forward and remove the barrel through the front of the slide.

DO NOT DISASSEMBLE YOUR PISTOL ANY FURTHER.
DO NOT REMOVE OR ALTER ANY PARTS, ESPECIALLY SAFETY PARTS.

If your pistol requires further work it should be done at an Authorized Service Center or at the factory.

BEFORE PROCEEDING MAKE SURE YOU ARE WEARING SAFETY GLASSES AND KEEP THE MUZZLE OF THE PISTOL POINTED AWAY FROM YOUR FACE.

Reassembly

P14•45, P13•45, P18•9 and P14•45 Limited, P13•45 Limited, P16•40 Limited Only. Go to Page 33 for P12•45/P12•45 Limited.

REASSEMBLY (continued)

STEP 1. Rotate barrel link forward and install the barrel through the front of the slide.

STEP 2. To install the barrel bushing on the barrel, push the barrel forward enough to allow you to slide the barrel bushing onto it. Then push the bushing rearward until it contacts the slide. Turn it clockwise to engage it in the slide.

STEP 3. Insert recoil guide by pushing it toward the front of the slide (***Figure 12***).

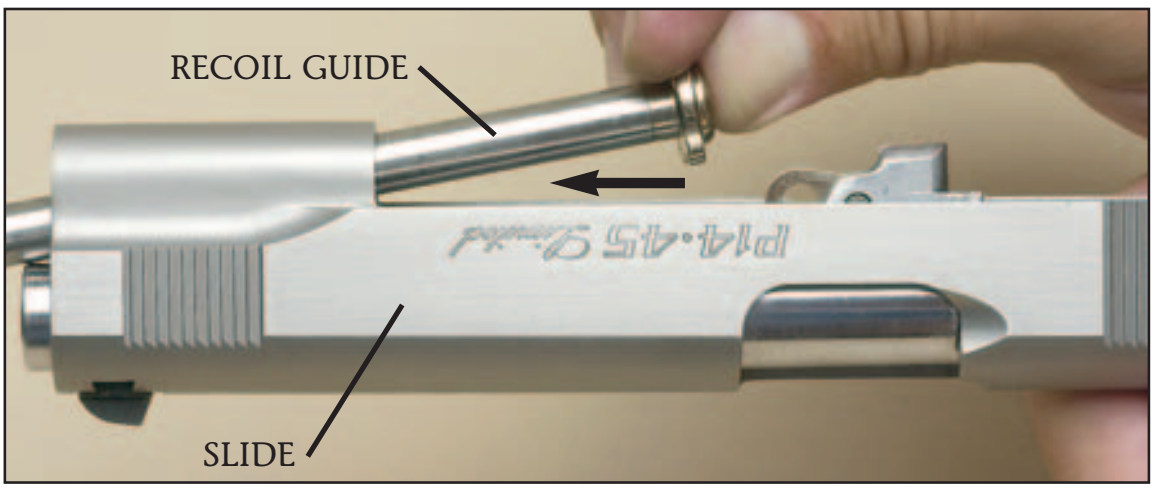

Figure 12

STEP 4. Slip recoil spring, closed end first, over the front of the recoil spring guide, until the spring end makes contact with the base of the guide.

STEP 5. Make sure the plunger lever is down (forward) at the top of the receiver, and keep it down by tipping the receiver forward. Wrap your fingers around the front of the slide to hold the recoil spring assembly in position. Now you can run the slide onto the receiver to the point where you can see the barrel link through the slide stop hole in the receiver. Insert the slide stop pin in and through the receiver and barrel link.

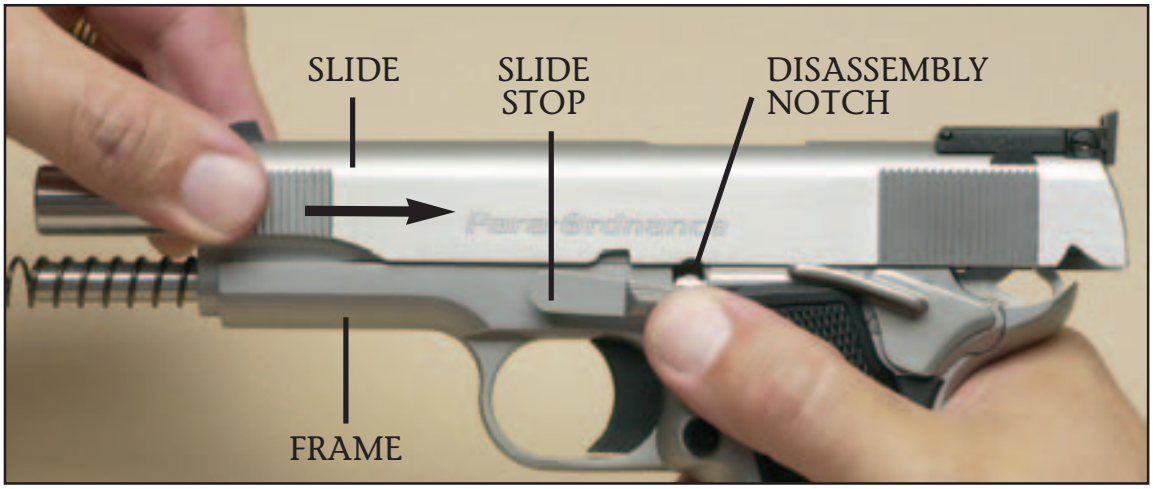

Figure 13

STEP 6. Grip the frame with one hand and the slide with the other (***Figure 13***). Now push the slide rearward to properly align the disassembly notch. Snap the slide stop pin into place by pressing up and against the slide stop detent.

STEP 7. Push the slide fully forward. Slip the recoil plug over the end of the recoil spring. Using the barrel bushing wrench apply and maintain pressure on the plug, gently and gradually push the spring and plug into the slide far enough so that you can rotate the barrel bushing with the wrench counter-clockwise slightly and hold the plug in place (***Figure 14***).

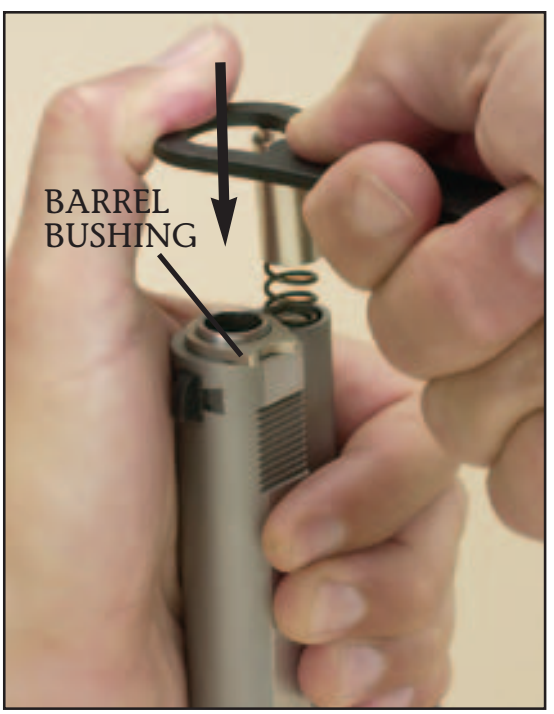

Figure 14

Now, place your bushing wrench over the bushing and, while pressing the wrench down firmly to hold the plug down, rotate the bushing counter-clockwise until the plug can snap into place (***Figure 15***).

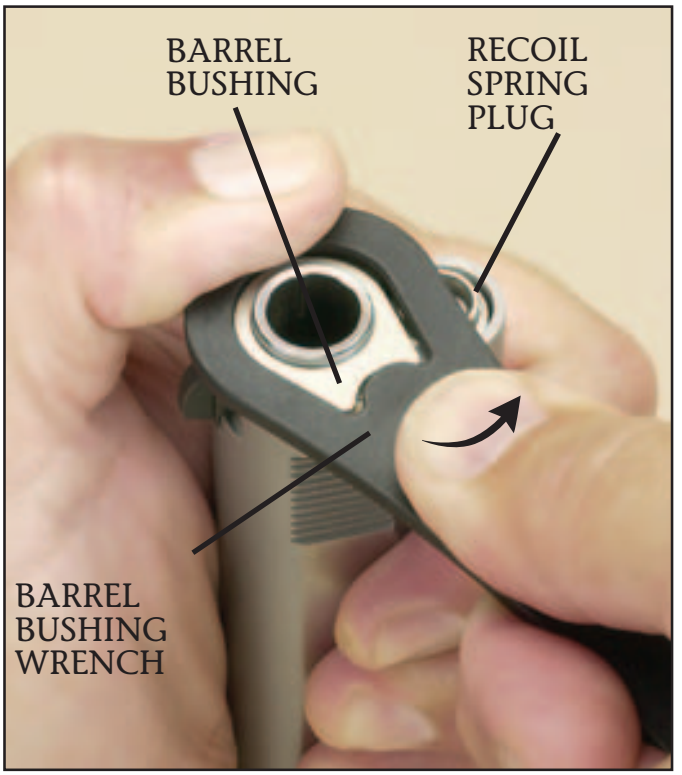

Figure 15

P14•45/P13•45/P12•45/P18•9 and P12•45 Limited ONLY

Sight Adjustment

The rear sight is adjustable for windage only. Using a 5/64" hex wrench which has been provided, loosen the hex set screw located directly in front of the rear sight notch. You may now change windage by moving the rear sight either left or right in its dovetail. Remember, always move your rear sight in the direction you want your bullet's impact to go.

Figure 16

Sight Adjustment

First, loosen the locking set screw (***Figure 17***) on the right side of the rear sight with the 1.5mm hex wrench which has been provided. To adjust your rear sight for elevation, use the largest blade of the screwdriver which has been provided. To raise the sight and thus raise the impact point of the bullet, turn the screw counter-clockwise. When adjustment is complete, retighten locking set screw. To adjust for windage, turn the screw on the right side of the rear sight clockwise to move the bullet's impact to the right; counter-clockwise to move impact to the left.

NOTE: There is no locking set screw for the windage adjustment screw.

Figure 17

ALWAYS WEAR SAFETY GLASSES AND KEEP PISTOL POINTED AWAY FROM YOUR FACE, WHEN PREPARING TO DISASSEMBLE YOUR PISTOL TO AVOID INJURY TO THE EYES IN THE EVENT THAT SOME COMPONENT MAY COME FLYING LOOSE FROM YOUR GUN.

P12•45/P12•45 Limited ONLY

DISASSEMBLY

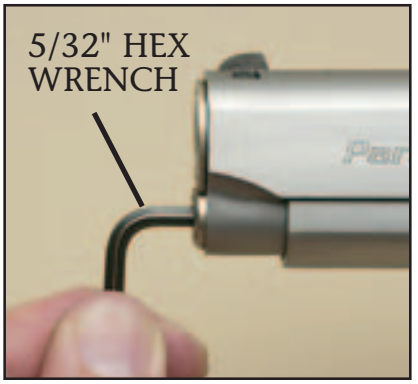

Figure 18

STEP 1. REMOVE THE MAGAZINE and make sure THERE IS NO ROUND IN THE CHAMBER.

STEP 2. Using the 5/32" hex wrench which has been provided, unscrew and remove the front section of the two-piece recoil spring guide (***Figure 18***).

STEP 3. Pull back on the hammer spur to cock hammer.

STEP 4. Push the slide down and back to the point where the slide stop lug is directly opposite the disassembly notch. Then push the rounded end of the slide stop pin, on the right side of the receiver, inward and through the receiver and out the left side (***Figure 19***). Disengage slide stop from the slide by removing slide stop from the receiver (***Figure 20***).

Figure 19

Figure 20

BEFORE PROCEEDING MAKE SURE YOU ARE WEARING SAFETY GLASSES AND KEEP THE MUZZLE OF THE PISTOL POINTED AWAY FROM YOUR FACE.

Figure 21

STEP 5. Wrap hand around slide at recoil area to control recoil spring. Push slide forward and remove slide from receiver (***Figure 21***).

STEP 6. Lift the rear of the recoil spring and guide, then remove towards rear of slide. Push front of recoil plug towards rear of slide, and remove (***Figure 22***).

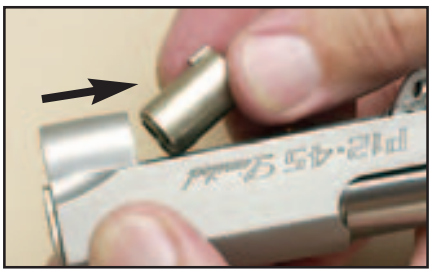

Figure 22

STEP 7. To remove the barrel bushing, turn the bushing counter-clockwise as far as it will go and pull it forward, and out of the slide and off the barrel.

STEP 8. With barrel bushing removed, rotate barrel link forward and remove the barrel through the front of the slide.

DO NOT DISASSEMBLE YOUR PISTOL ANY FURTHER. DO NOT REMOVE OR ALTER ANY PARTS, ESPECIALLY SAFETY PARTS.

If your pistol requires further work it should be done at an Authorized Service Center or at the factory.

Reassembly

STEP 1. Rotate barrel link forward and install the barrel through the front of the slide.

STEP 2. Slip barrel bushing over end of barrel, and push bushing rearward as far as it will go. Turn bushing clockwise to allow recoil plug to be installed.

STEP 3. Insert recoil plug by pushing it toward the front of the slide (***Figure 23***).

Figure 23

STEP 4. Place the slide on a table or bench in an inverted position (sights at bottom). Grasp the front end of slide with your left thumb and index finger. With your right hand, carefully compress the recoil spring assembly into the recoil spring plug from the rear. Use your right thumb and index finger to carefully compress the recoil spring assembly toward the front until the guide plate can be lowered in place just in front of the barrel lug. Make sure barrel link is rotated back, then lower it in place. While being careful not to allow the spring assembly to fly out, slowly turn the slide over (recoil spring assembly at bottom). Simultaneously wrap your left hand around the front of the slide to keep the recoil spring assembly from popping out.

STEP 5. Make sure the plunger lever is down (forward) at the top of the receiver, and keep it down by tipping the receiver forward. Wrap your fingers around the front end of the slide to hold the recoil spring assembly in position.

STEP 6. Align the hole in the barrel link with the slide stop pin hole. Insert the slide stop pin partially through the receiver. Then grip the frame with one hand and the slide with the other. Now push the slide rearward to properly align the disassembly notch. Snap the slide stop pin into place by pressing up and against the slide stop detent (***Figure 24***).

An alternate method of gripping the frame and the slide with one hand to align the disassembly notch and insert the slide stop pin with the other hand is shown below (***Figure 25***).

Figure 24

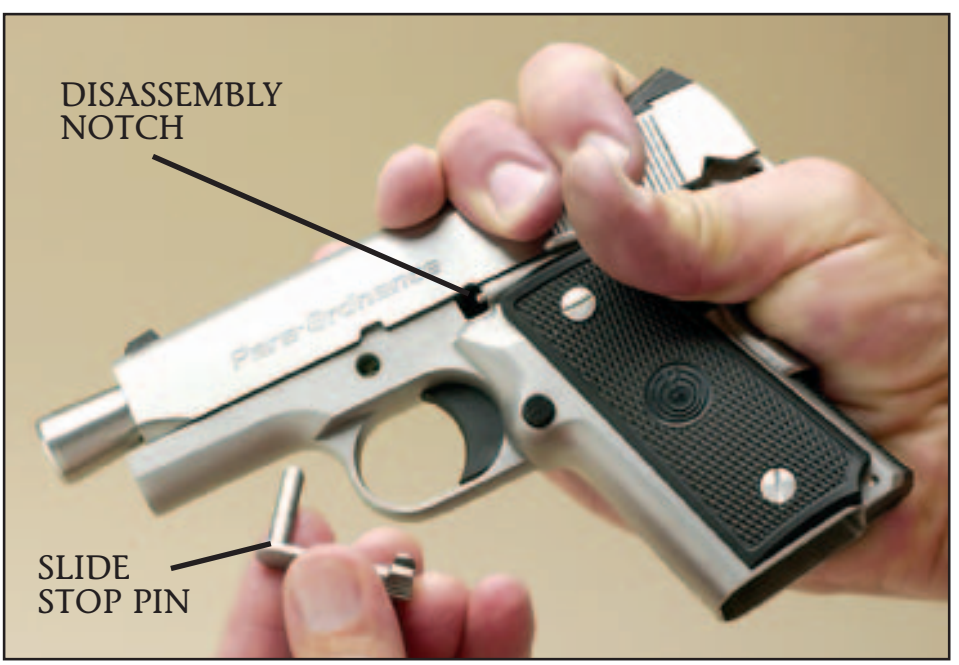

Figure 25

STEP 7. Replace the front section of the recoil guide through the center of the plug, and using the hex wrench, screw the front section firmly in place (***Figure 26***).

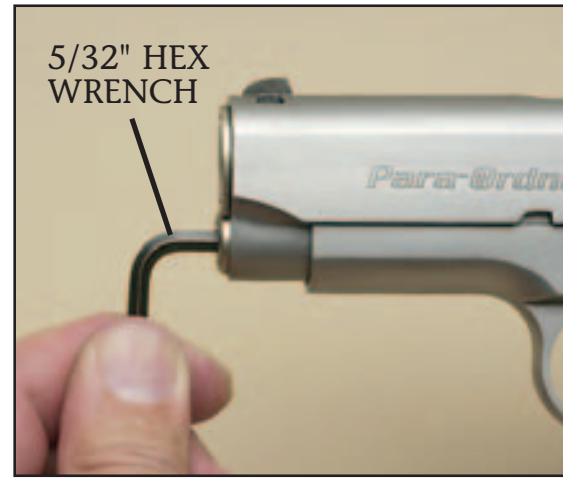

Figure 26

Cleaning Pistol

1. Disassemble (field-strip) the pistol to the extent described on pages 22 through 32.
2. Clean your pistol by brushing the barrel bore and chamber with a good powder-removing solvent and bore brush. Wipe the areas clean with patches or a swab.
3. Using a small brush dipped in solvent, remove all deposits from around the breech of the barrel, chamber, extractor and adjacent areas which have been subjected to powder residue. Wipe all surfaces clean with patch or swab.
4. After cleaning the entire pistol, use a cloth to apply a light coating of high quality gun oil by passing it once through the barrel and all other surfaces.

NOTE: Excess accumulations of oil can interfere with the safe and reliable function of the pistol.

ALWAYS PASS A DRY PATCH THROUGH THE BARREL TO REMOVE AS MUCH OIL AS POSSIBLE PRIOR TO USING PISTOL. FIRING THE PISTOL WITH OIL, GREASE OR ANY OTHER MATERIAL EVEN PARTIALLY OBSTRUCTING THE BORE MAY RESULT IN DAMAGE TO THE PISTOL WHICH CAN CAUSE INJURY, DEATH, OR PROPERTY DAMAGE.

Cleaning High-Capacity Magazine

This should be done whenever cleaning the pistol.

BEFORE PROCEEDING MAKE SURE YOU ARE WEARING SAFETY GLASSES AND KEEP THE MAGAZINE POINTED AWAY FROM YOUR FACE.

Slide magazine floor plate toward the front of the magazine, taking care to avoid forcible ejection of the magazine spring from the body. With the floor plate out of the way, remove the spring and follower. Clean all components, taking care to remove any powder deposits on the magazine retaining lips and follower (***Figure 27***).

NOTE: Place spring correctly oriented with closed loop uppermost pointing forward.

High-Capacity
Magazine Assembly

10-Round
Magazine Assembly

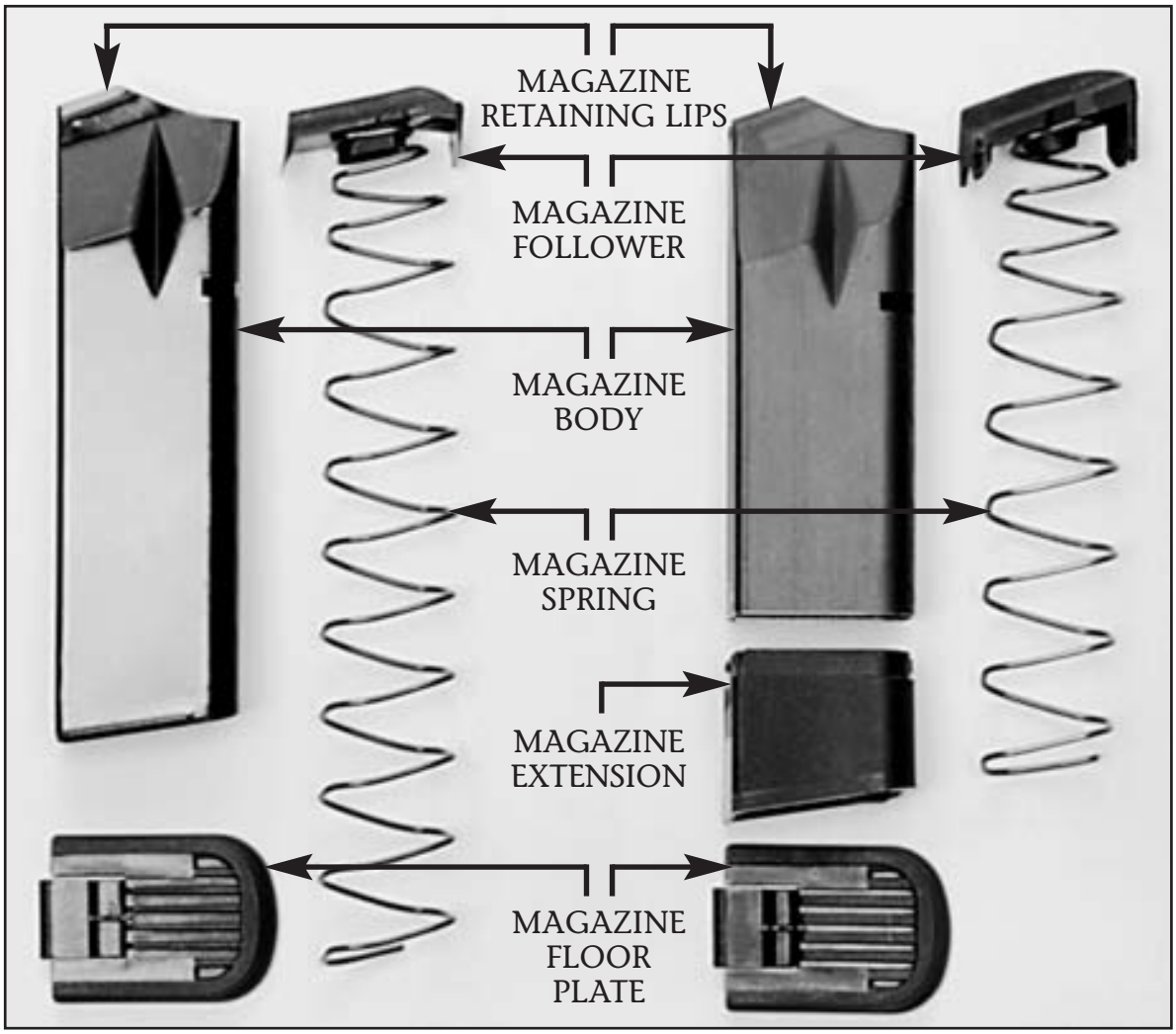

Figure 27

HIGH-CAPACITY MAGAZINE (LEFT) IS FOR LAW ENFORCEMENT ONLY. FOR RECREATIONAL USE, MAGAZINE CAPACITY IS RESTRICTED TO 10 ROUNDS IN U.S.A. AND CANADA.

DISASSEMBLY, CLEANING & REASSEMBLY OF 10-ROUND PARA-ORDNANCE MAGAZINE

BEFORE PROCEEDING MAKE SURE YOU ARE WEARING SAFETY GLASSES AND KEEP THE MAGAZINE POINTED AWAY FROM YOUR FACE.

DISASSEMBLY

STEP 1: Remove all ammunition from the magazine. Firmly grasp the metal magazine body in one hand and with the other hand grip the magazine's base plate. Use your thumb to slightly raise the slotted tab at the rear of the base plate.

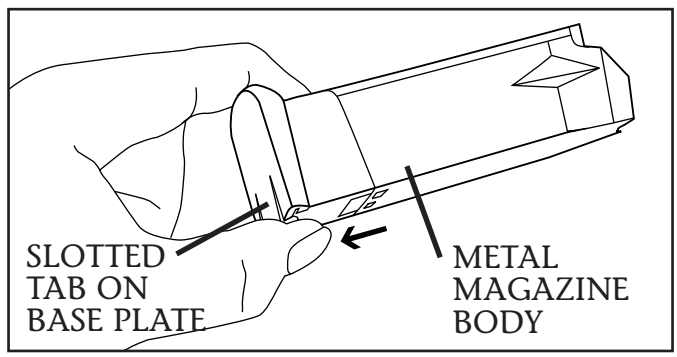

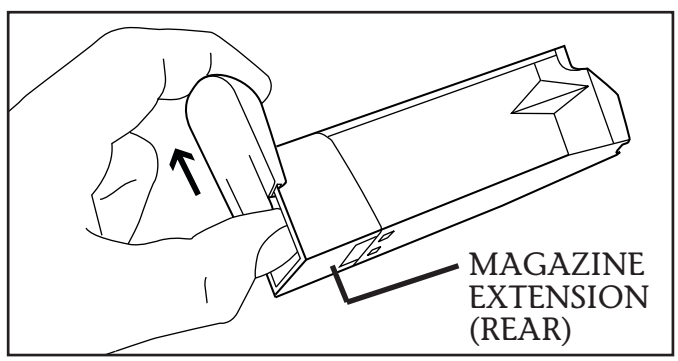

CAUTION: Lift the slotted tab only enough to clear the rear of the magazine extension.

STEP 2: Slide the base plate towards the front of the magazine to remove it.

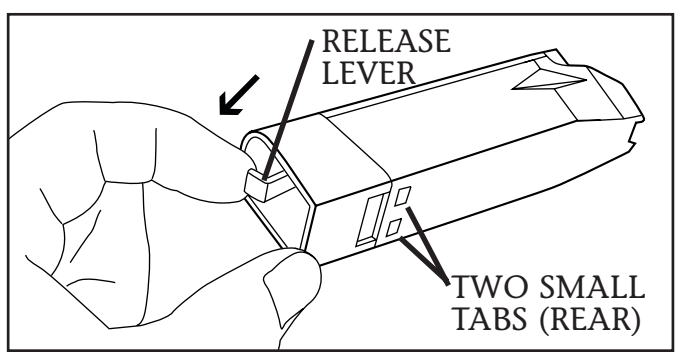

STEP 3: While holding the magazine in one hand, use the index finger of the other hand to gently apply a small amount of pressure to the release lever at the bottom of the magazine extension.

This will retract the two small tabs at the rear of the extension which keep it in place. Gently increase the pressure on the release lever until some resistance is felt.

CAUTION: Do not apply excessive pressure to the release lever or it may break off.

CAUTION: The spring and follower are compressed in the magazine. Care should be taken during this step to prevent them from flying out.

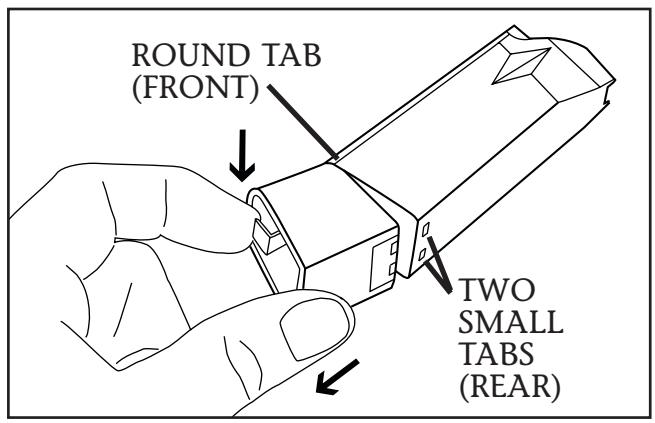

STEP 4: While maintaining the gentle pressure on the release lever, begin to rotate the magazine extension downward to release it from the metal magazine body. Release pressure from the lever as soon as the two small tabs at the top rear of the extension clear the magazine body. The extension can now be removed by easing it slightly rearward to release the round tab at the front. The spring and magazine follower can now be removed through the opening at the bottom of the metal magazine body. As you remove it, note which end faces the front.

Cleaning

CAUTION: Do not attempt to remove the follower from the spring.

Wipe the outside of the magazine with a rag. Insert a dry rag through the opening at the bottom of the metal magazine body and remove all residue from the inside. Do the same from the smaller opening at the top.

Clean all residue from the spring and from the magazine follower.

CAUTION: Do not apply oil to any part or lubricate any part of the magazine.

Reassembly

STEP 5: Insert the spring and follower into the opening at the bottom of the metal magazine body.

CAUTION: Make sure that the rounded top edge of the follower is at the front of the magazine.

Position the bottom of the spring around the four posts on the magazine extension. Then, gently compress the spring with the magazine extension so that it is fully contained inside the magazine body. Engage the round tab at the top front of the magazine extension in the small hole at the front of the magazine body.

While still holding the spring compressed, gently apply a tiny amount of rearward pressure to the lever at the bottom of the extension until some resistance is felt.

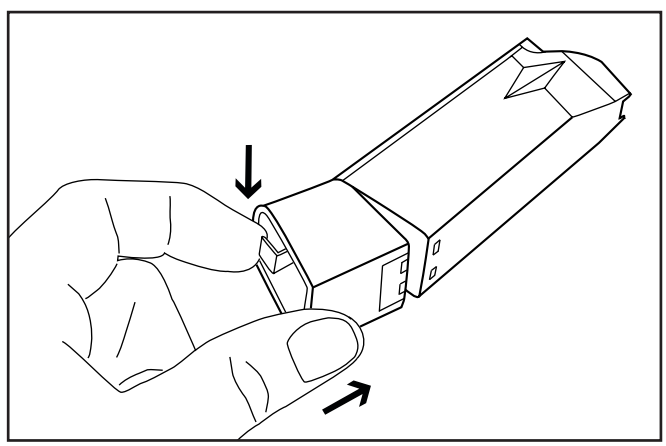

Then, rotate the rear of the extension upwards so it engages the magazine body. Continue rotating until the two small tabs are fully engaged.

Release the pressure from the lever at the bottom of the extension. The magazine extension is now locked in place.

STEP 6: With your index finger, gently depress the lever at the bottom of the extension. This will allow you to replace the base plate without breaking the tab.

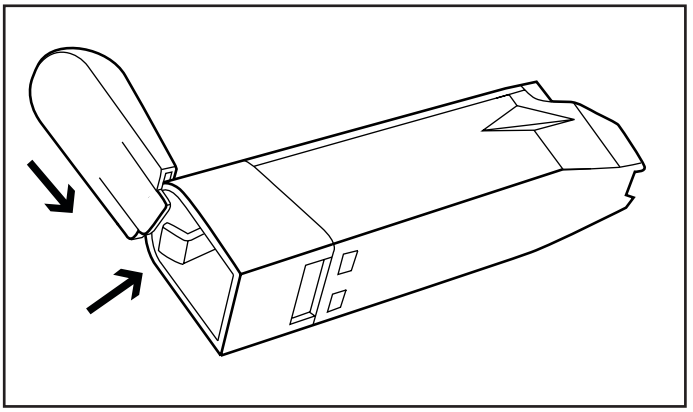

While holding the lever in a depressed position, begin to replace the base plate by sliding it rearward from the front of the extension. Be sure that the base plate engages the two rails on the sides of the extension.

Continue to slide the base plate towards the rear until a click is heard, indicating that the slotted tab at the rear of the base plate has passed over the rear edge of the extension, locking it in place.

Reassembly is now complete.

These instructions apply to all 10-round magazines for Para-Ordnance P12•45, P13•45, P14•45, P16•40 and P18•9 handguns.

TRANSPORTATION AND STORAGE

When transporting your firearm to and from shooting activities, keep it unloaded and obey all laws relating to the transportation of firearms in your area.

When storing your firearm, store it securely and keep it separated from ammunition, under lock and key, and out of the sight and reach of children and other inexperienced persons.

NOTE: Protect your firearms from theft.

DO NOT STORE your pistol in anything which will attract moisture, e.g., leather or heavy cloth, and do not store it in an air-tight container or with a plug inserted in the barrel for these are factors that can contribute to corrosion.

EXTENDED STORAGE requires that the internal mechanisms are well oiled with an acid-free lubricating oil or preservative while external mechanisms (receiver, barrel, etc.) should be coated with an anti-rust oil.

COLD CLIMATE STORAGE requires that you make use of an oil which will not congeal at low temperatures. USE SPARINGLY.

BEFORE USING YOUR FIREARM AGAIN BE SURE TO CLEAN IT.

WARRANTY INFORMATION

Para-Ordnance acknowledges its obligations under implied warranty legislation, with respect to the sale of consumer goods, that may be in force in jurisdictions where its products are sold. Due to differences in the extent and interpretation of such statutes, and also on the basis of the Magnusson-Moss Warranty Act of the United States of America, Para-Ordnance has elected not to offer any written or express warranty on its product line and you are advised to consult existing legislation in your country, state or province with regard to any implied warranty rights you may have under such laws. However, Para-Ordnance is strongly committed to properly servicing its products, as it has over the years, and in place of an express or written warranty it will provide all necessary service for its pistols purchased after January 1, 2001 free of charge to the original purchaser only, where adjustment or repair is required due to some defect in materials or workmanship.

NOTE: Different remedies may be available to you in different jurisdictions.

SPARE PARTS

For Para-Ordnance replacement parts please contact your local dealer who should be able to assist you. Alternatively, you can also contact the Para-Ordnance Parts Department by mail or phone, for up-to-date information on the names and locations of our Authorized Service Centers as well as current parts prices.

PARTS AVAILABLE FOR SALE SHOULD BE INSTALLED AT A PARA-ORDNANCE AUTHORIZED SERVICE CENTER. OTHERWISE, IT IS THE PURCHASER'S TOTAL RESPONSIBILITY TO MAKE ABSOLUTELY CERTAIN THAT ANY PARTS FITTED AND INSTALLED ARE OF THE CORRECT TYPE AND THE WORK IS PERFORMED BY A COMPETENT PERSON.

PARA-ORDNANCE WILL NOT BE RESPONSIBLE FOR ANY UNAUTHORIZED ALTERATIONS PERFORMED, UNAUTHORIZED ATTACHMENTS FITTED OR UNAUTHORIZED PARTS USED 0N THIS PRODUCT.

NOTES:

PARTS ILLUSTRATION

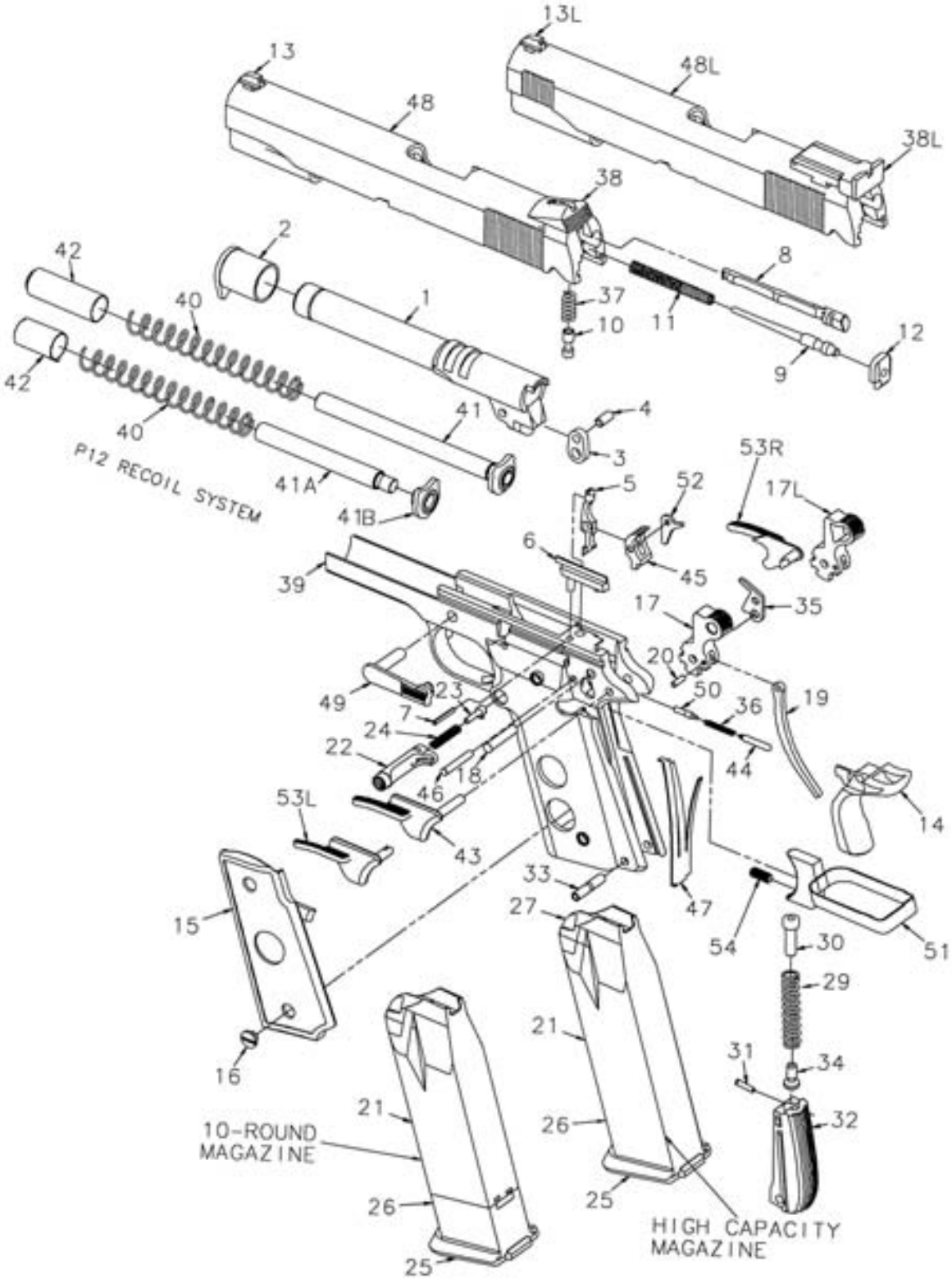

PARTS LIST

1. BARREL
2. BARREL BUSHING
3. BARREL LINK
4. BARREL LINK PIN
5. DISCONNECTOR
6. EJECTOR
7. EJECTOR PIN
8. EXTRACTOR
9. FIRING PIN
10. FIRING PIN PLUNGER
11. FIRING PIN SPRING
12. FIRING PIN STOP
13. FRONT SIGHT

13L. FRONT SIGHT LIMITED

14. GRIP SAFETY
15. GRIP (SET)
16. GRIP SCREW (4)
17. HAMMER

17L. HAMMER LIMITED

18. HAMMER PIN
19. HAMMER STRUT
20. HAMMER STRUT PIN
21. MAGAZINE ASSEMBLY
22. MAGAZINE CATCH
23. MAGAZINE CATCH LOCK
24. MAGAZINE CATCH SPRING
25. MAGAZINE FLOOR PLATE
26. MAGAZINE EXTENSION (10-ROUND ONLY)
27. MAGAZINE FOLLOWER
28. MAGAZINE SPRING (NOT SHOWN)
29. MAIN SPRING
30. MAIN SPRING CAP
31. MAIN SPRING CAP PIN
32. MAIN SPRING HOUSING (FLAT)
33. MAIN SPRING HOUSING PIN
34. MAIN SPRING HOUSING PIN RETAINER
35. PLUNGER LEVER
36. PLUNGER SPRING
37. PLUNGER SPRING F/P
38. REAR SIGHT

38L. ADJUSTABLE REAR SIGHT LIMITED

39. RECEIVER
40. RECOIL SPRING
41. RECOIL SPRING GUIDE

41A. RECOIL SPRING GUIDE ROD (P12•45 ONLY)

41B. RECOIL SPRING GUIDE HEAD (P12•45 ONLY)

42. RECOIL SPRING PLUG
43. SLIDE LOCK SAFETY
44. SAFETY LOCK PLUNGER
45. SEAR
46. SEAR PIN
47. SEAR SPRING
48. SLIDE

48L. SLIDE LIMITED

49. SLIDE STOP
50. SLIDE STOP PLUNGER
51. TRIGGER ASSEMBLY
52. TRIGGER BAR LEVER

53L. AMBIDEXTROUS SLIDE LOCK SAFETY LEFT (LIMITED ONLY)

53R. AMBIDEXTROUS SLIDE LOCK SAFETY RIGHT (LIMITED ONLY)

54. OVER TRAVEL SCREW (LIMITED ONLY)

SERVICE AND REPAIR

If any problem or question should arise with regard to the performance of your firearm, please contact us, by mail or telephone, and fully describe all circumstances involved. This will allow us to determine the best way to handle your problem. If authorized factory service is deemed necessary, you will be given a return authorization number and shipping instructions.

MAKE SURE THAT THE MAGAZINE AND PISTOL ARE UNLOADED. DO NOT SHIP ANY CARTRIDGES WITH A FIREARM.

WHEN AUTHORIZED TO SHIP YOUR FIREARM FOR ADJUSTMENT OR REPAIR, PLEASE CAREFULLY NOTE THE FOLLOWING:

1. A detailed, written explanation of your problem should accompany the firearm being shipped for service or repair. Include model name, serial number and your return address (day telephone number optional). Also include a copy of your original proof of purchase.
2. All firearms should be shipped by common carrier (e.g., UPS), prepaid (we will not accept collect shipments) and insured for their full value.
   It is illegal for unlicensed individuals to ship handguns through the mail.
3. Due to the vast number of laws governing the transfer and transportation of firearms, it is strongly recommended that your firearm be shipped through a licensed dealer who will also accept delivery on your behalf when the pistol is returned.The shipment should be accompanied by a signed copy of the dealer's license.
4. DO NOT include holsters, custom grips or other accessories when shipping your firearm for service.

5. DO NOT indicate the nature of the contents on the package or use the "Para-Ordnance" name to address the shipment.
6. DO include the return authorization number on the outside of the package.

LIMITS OF LIABILITY

NOTE: PARA-ORDNANCE HAS CAREFULLY PACKAGED THIS PRODUCT PRIOR TO SHIPMENT FROM THE FACTORY. PLEASE EXAMINE IT CAREFULLY AT TIME OF PURCHASE TO ENSURE IT IS UNDAMAGED.

PARA-ORDNANCE SHALL NOT BE RESPONSIBLE IN ANY MANNER WHATSOEVER FOR INJURY, DEATH, OR DAMAGE TO PROPERTY AS A RESULT OF THE INTENTIONAL OR ACCIDENTAL DISCHARGE OF THIS FIREARM, OR FROM ITS PROPER FUNCTION WHEN THE PISTOL IS USED FOR PURPOSES FOR WHICH IT WAS NOT DESIGNED. FURTHERMORE, PARA-ORDNANCE SHALL NOT BE RESPONSIBLE FOR ANY CLAIMS THAT MAY ARISE AS A RESULT OF, WHETHER IN WHOLE OR IN PART, IMPROPER OR CARELESS HANDLING, UNAUTHORIZED MODIFICATIONS, USE OF IMPROPER AMMUNITION (WRONG CALIBER, DEFECTIVE, HAND LOADED, OR RELOADED CARTRIDGES) THAT IS NOT ORIGINAL HIGH QUALITY COMMERCIALLY MANUFACTURED AND IN GOOD CONDITION, ABUSE, NEGLECT, CORROSION, OR OTHER INFLUENCES BEYOND OUR IMMEDIATE AND DIRECT CONTROL. UNDER NO CIRCUMSTANCES SHALL PARA-ORDNANCE BE RESPONSIBLE FOR INCIDENTAL OR CONSEQUENTIAL DAMAGES, SUCH AS LOSS OF USE OF PROPERTY, LOSS OF EARNINGS OR PROFITS, OR ANY OTHER COMMERCIAL LOSS.

NOTE: DIFFERENT REMEDIES MAY BE AVAILABLE TO YOU IN DIFFERENT JURISDICTIONS.

FIREARM RECORD

MODEL _____

SERIAL NO. _____

PURCHASED FROM _____

_____

_____

DATE PURCHASED _____

This instruction manual should always accompany this firearm and be transferred with it upon change of ownership.

980 TAPSCOTT ROAD
SCARBOROUGH, ONTARIO M1X 1C3
(416) 297-7855 • FAX: (416) 297-1289
www.paraord.com

MANUAL #PO0702